PART TO BE COMPLIANT WITH DIRECTIVE 2015/863/EU (ROHS) & EC 1907/2006 (REACH) OF THE EUROPEAN PARLIAMENT.

Rev No / ZONE	Date	Change	ECN
2	03.06.25	ExTI PART #, OPERATING TEMP., IR, AND ADDED PACKING DETAILS.	

Sl No	PACKING DESCRIPTION	SPECIFICATION
1.	Max weight Allowed	20 Kg

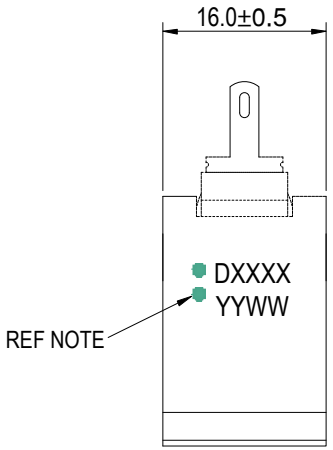

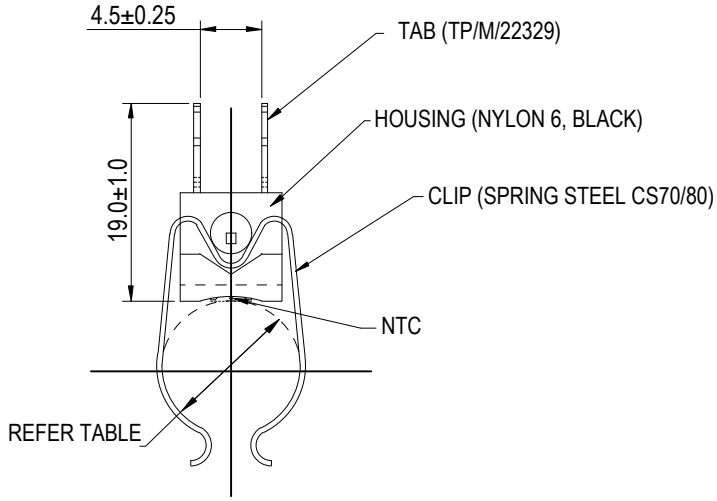

ELECTRICAL SPECIFICATION:

1. RESISTANCE AT 25°C : 10147.0Ω NOM
SC/F P1 01 2. RESISTANCE AT 85°C : 1089.0Ω ± 3.20%(±1.0°C)
3. B-VALUE (25/85°C) : 3977K ± 1.5%
4.DISSIPATION FACTOR : >=2.1mW/K
2 5.INSULATION RESISTANCE : >2MΩ AT 500V DC
6. RESPONSE TIME (t63.2%) : 3.0SEC MAX (25/85°C WATER)
2 7. OPERATING TEMP. : -20 TO 110°C

NOTE :

1. IDENTIFICATION MARK: A). ONE DOT FOR THE 13...15MM SIZE,
B). TWO DOTS FOR THE 17...18MM SIZE,
2. TABS 2.8(+0.12/-0.01) X0.5 (±0.05)mm FOR AMP CONNECTOR .

TABLE 1:

Sl.No	2 ExTI PART No	CUSTOMER PART#	PIPE DIA	PRINT CODE	CLIP COLOR
02	I-2152A/13 (REV 02)	----	Ø13.0 TO Ø15.0	YYWW CUSTOMER PART #	BLACK
01	I-2152A/17 (REV 02)	----	Ø17.0 TO Ø18.0	YYWW CUSTOMER PART #	SILVER

2 TABLE 2 (PACKING DETAILS)

Sl.No	ExTI PART No	CUSTOMER PART#	PARTS/ TRAY	QTY/ TOP& BOTTOM BOX	QTY/ FINAL BOX
02	I-2152A/13 (REV 02)	----	50 Nos	200 Nos	2000 Nos
01	I-2152A/17 (REV 02)	----	50 Nos	200 Nos	2000 Nos

RvT CHARACTERISTICS:

Temp°C	Resistance Nom (Ω)	Resistance Min (Ω)	Resistance Max (Ω)	Resistance Tol (±%)
-40	338466	297410	379522	12.13
-35	244616	216258	272974	11.59
-30	178670	158877	198463	11.08
-25	131835	117883	145788	10.58
-20	98230	88301	108160	10.11
-15	73879	66748	81010	9.65
-10	56065	50900	61230	9.21
-5	42914	39142	46686	8.79
0	33120	30343	35896	8.38
5	25764	23705	27822	7.99
10	20194	18657	21731	7.61
15	15944	14789	17100	7.25
20	12677	11803	13551	6.89
25	10147	9482	10812	6.55
30	8174	7666	8683	6.22
35	6626	6235	7017	5.90
40	5403	5101	5705	5.59
45	4431	4196	4665	5.29
50	3653	3471	3836	5.00
55	3028	2885	3171	4.72
60	2523	2411	2635	4.45
65	2112	2024	2201	4.19
70	1777	1707	1847	3.93
75	1501	1446	1557	3.68
80	1274	1230	1318	3.44
85	1089	1054	1124	3.20
90	929	897	961	3.43
95	798	769	827	3.65
100	688	661	715	3.87
105	595	571	620	4.08

EXA THERMOMETRICS
AN AMPHENOL COMPANY

SCALE	UNITS	SHEET
NTS	mm	1 OF 1

TOLERANCES UNLESS SPECIFIED

OVER	-	6	30	120	315	1000	2000	ANGLE (°)	
UP TO	6	30	120	315	1000	2000	-	RIGHT	1
±	0.1	0.15	0.2	0.3	0.4	1.0	2.0	OTHER	1.5

DRAWING NO: TP/A/23161

PART NAME: NTC- PIPE CLIP SENSOR

ExTI PART NO: REFER TABLE

CUSTOMER: ----

CUST. PART NO.: ----

SPECIAL CHARACTERISTICS
TOTAL NUMBER OF SPECIAL CHARACTERISTICS:
SC/S - SPECIAL CHARACTERISTICS RELATED TO SAFETY = 0
SC/L - SPECIAL CHARACTERISTICS RELATED TO LEGAL AND REGULATORY = 0
SC/F - SPECIAL CHARACTERISTICS RELATED TO FUNCTIONS = 01

DATE	ISSUE	DRAWN	CHECKED	APPROVED
03.06.25	3	VSN	GPM	IB
15.02.21	2	NR	GPM	IB

The copyright of this Specification / Drawing is the property of Exa Thermometrics and it is issued on the condition that it is not to be copied / reprinted or stored in any electronic retrieval system nor its contents disclosed either wholly or in part to any third party without the consent in writing or with the conditions of a contract .